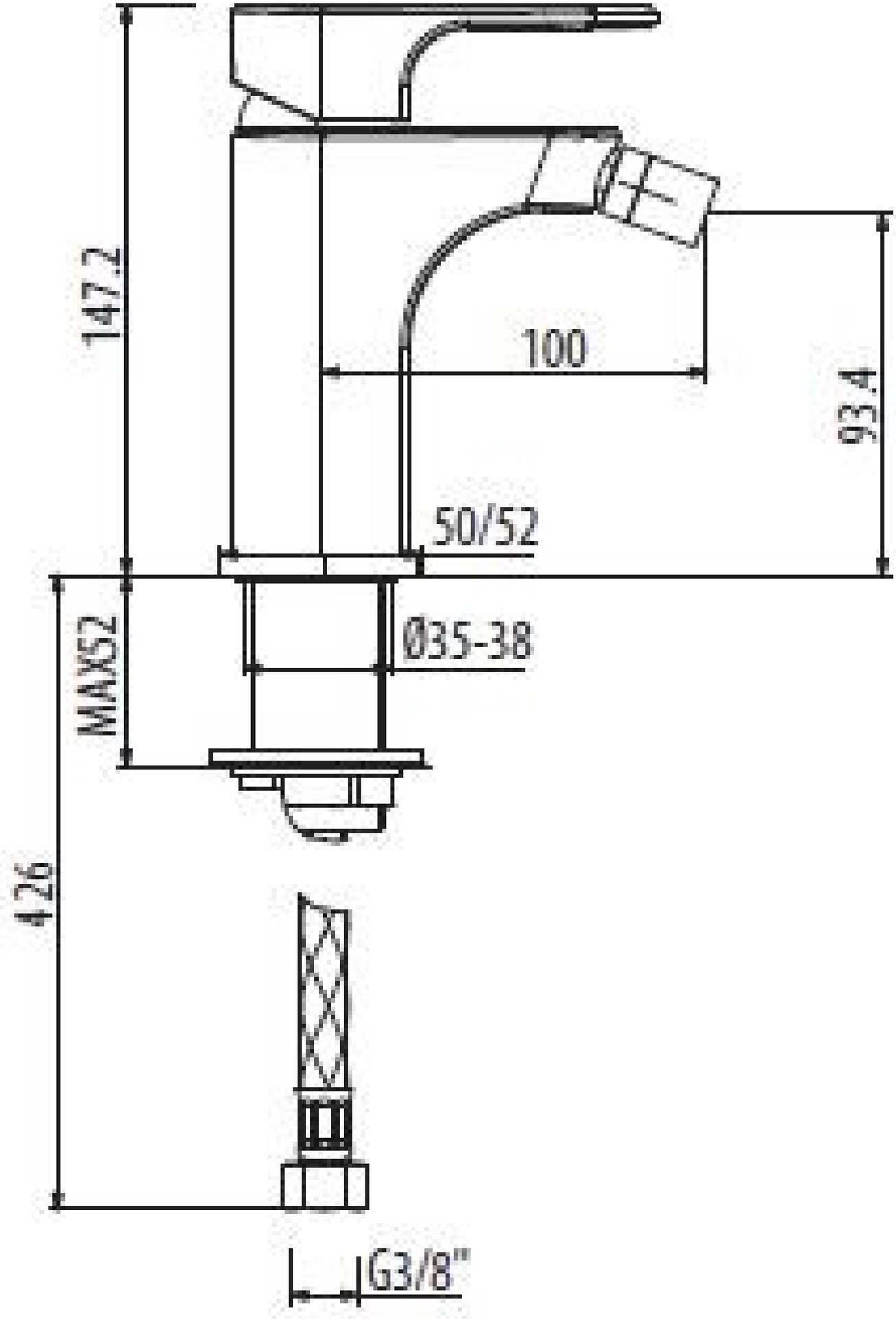
147.2
100
93.4
50/52
MAX52
Ø35-38
426
G3/8"